Seatara

BathMobile

Designed for you

commode & shower chair

User Manual

V. 1.2

TABLE OF CONTENTS

GENERAL 2

Introduction 2
Delivery 2
Intended use 2
Expected lifetime 2
Warranty 2

SPARE PARTS ORDERS, COMPLAINTS 3

SAFETY 3

Intended use 3
Warnings 3
Danger of slipping! 3
Danger of tipping over! 3
Danger of breakage! 4
Danger of falling! 4
Danger of pinching! 4
Danger of being run over 4
Symbols 5

PRODUCT SPECIFICATIONS 6

Dimensions 6
Part numbers 7

ASSEMBLY 8

Optional self-propelled model 15

DISASSEMBLY 16

OPTIONAL ACCESSORIES 19

Padded Seat 19
Padded Arm rests 20
Shower Holder 20
Rectangular removable pan - Option 1 21
Round removable pan - Option 2 22
Carrying Case 23

CLEANING AND MAINTENANCE 24

WARRANTY 25

WARNINGS FOR USE 26

Please read this user manual before using the commode and shower chair for the first time, and keep it at hand for future reference.

GENERAL

INTRODUCTION

This user manual provides information and instructions for using and maintaining the BathMobile commode and shower wheelchair.

DELIVERY

The product has been carefully inspected in the factory for defects and completeness. When you receive it, carefully check the product for possible damage during transport and for completeness.

INTENDED USE

BathMobile commode and shower chair is designed for homecare and out-user purposes. The commode and shower chair is to be used exclusively for showering or bathing, using a toilet, or for transfer of persons inside buildings. The commode and shower chair is not designed for the outdoors, nor for long periods of sitting.

Store the commode and shower chair in dry conditions only!
Ambient temperature: 0 – 40°C (104°F)
Relative humidity: 30% - 70%

EXPECTED LIFETIME

The expected lifetime of the commode and shower chair when properly used and maintained is up to 4 years.

WARRANTY

This product carries a 2-year warranty. The warranty is conditional on use in accordance with the requirements and instructions outlined in this document, as well as regular maintenance. All rubber parts are excluded. Not observing the user manual instructions, improper maintenance, and unauthorized modifications to the product without the manufacturer's prior written permission will automatically result in the immediate termination of liability and void the product warranty.

SPARE PARTS ORDERS, COMPLAINTS

To ensure delivery of correct spare parts and fast processing of complaints, always provide the product name, serial number (SN) and the product's year of manufacture when ordering spare parts and in case of complaints.

You can find this information on the BathMobile nameplate.

SAFETY

The following safety rules must be observed when using BathMobile:

INTENDED USE

- The BathMobile commode and shower chair is intended for use in the toilet and shower. It may not be used for any other purpose.
- The BathMobile commode and shower chair is intended for use solely by individuals who have a medical or physical indication for using it.
- The BathMobile is intended for use indoors only.
- Users who are not completely independent should not use the BathMobile commode and shower chair unsupervised.

WARNINGS

DANGER OF SLIPPING!

- Before using, verify that the upholstered seat is securely pressed into the seat frame.
- Always lock the wheels before using the commode and shower chair, in order to prevent it from rolling away.
- The user should not sit on the front edge of the upholstered seat or seat cushion. Make sure that the user sits all the way back on the seat.

DANGER OF TIPPING OVER!

- The commode and shower chair may be used only with the armrests locked into position.
- Do not bump into door sills or jambs.
- Do not use on uneven surfaces
- Use the BathMobile commode and shower chair only indoors, on solid, even, non-slippery surfaces.
- Do not tilt the commode and shower chair backwards.

DANGER OF BREAKAGE!

- Never attempt to carry or lift the BathMobile while a user is sitting in it.
- The commode and shower chair is suitable only for transporting persons. Be sure to observe the maximum allowable user body weight (specified on the nameplate)!
- If the BathMobile commode and shower chair is damaged in any way such as a fall from height or bumping into something, it is no longer suitable for use. BathMobile may not be used if any external damage signs are visible such as cracks or breakage.
- If the shape of the commode and shower chair has changed in any significant manner, it may no longer be used.

DANGER OF FALLING!

- Sitting down, standing up and moving the user should be supervised by a qualified caregiver, as suitable for the user’s health condition.
- Using the commode and shower chair on any sloped surface may be done only with the assistance of a caregiver.

DANGER OF PINCHING!

- Avoid holding near the folding mechanism, to avoid body parts or objects from getting pinched.

DANGER OF BEING RUN OVER

- Avoid placing feet in the proximity of the chair's wheels, in order to avoid being run over.

SYMBOLS

SN	"Serial Number". This symbol shall be followed by, or appear above the manufacturer's serial number.
	"Manufacturer". This symbol shall be adjacent to the name and address of the manufacturer.
	"Caution! Consult accompanying documents" or "Attention! See instructions for use."
	"Consult instructions for use or consult operating instructions"
max 130 kg	The user’s weight must not exceed 130 kg
EC REP	"Authorized Representative in the European Community". This symbol shall be adjacent to the name and address of the authorized representative in the European Community. The address is not required on an immediate container unless the immediate container is the outer container.
CE	This symbol is a mandatory marking for devices entering the European market to indicate conformity with the essential health and safety requirements set out in European Directives. The symbol may be accompanied by a four-digit identification number of the notified body. The vertical dimensions may not be less than 5 mm high.
	"Not for general waste". For European Union States. This symbol should be used to mark devices that are reusable and not contaminated at the end of the device life.
	"Keep away from sunlight"
	The product packaging can be recycled

PRODUCT SPECIFICATIONS

DIMENSIONS

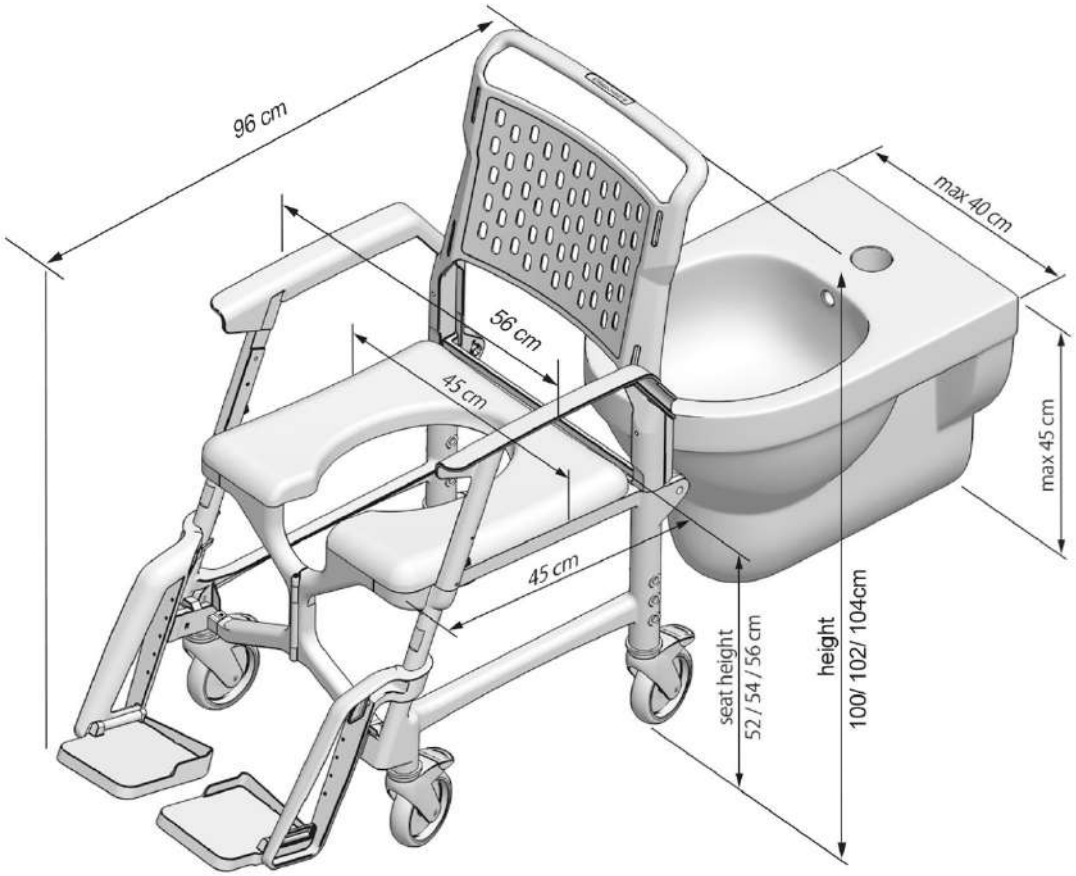

PART NUMBERS

As we continue developing and making technical improvements with respect to the design shown in this user manual, we reserve the right to changes without notice.

ITEM NO.	PART NUMBER	DESCRIPTION	QTY.
1	MR4001-33-242	**BACK REST WITH HOLES**	1
2	MR4001-42-242	**SIDE WALL RIGHT ASSEMBLY**	1
3	MR4001-41-242	**SIDE WALL LEFT ASSEMBLY**	1
4	MR4001-37-241	**HAND REST LEFT ASSEMBLY**	1
5	MR4001-38-241	**HAND REST RIGHT ASSEMBLY**	1
6	MR4001-13-242	**SEAT**	1
7	MR4001-40-242	**FOOT REST LEFT ASSEMBLY**	1
8	MR4001-39-242	**FOOT REST RIGHT ASSEMBLY**	1
9	MR4001-43-242	**DOOR ASSEMBLY**	1
10	MR4001-01-241	**CASTER WHEEL**	4

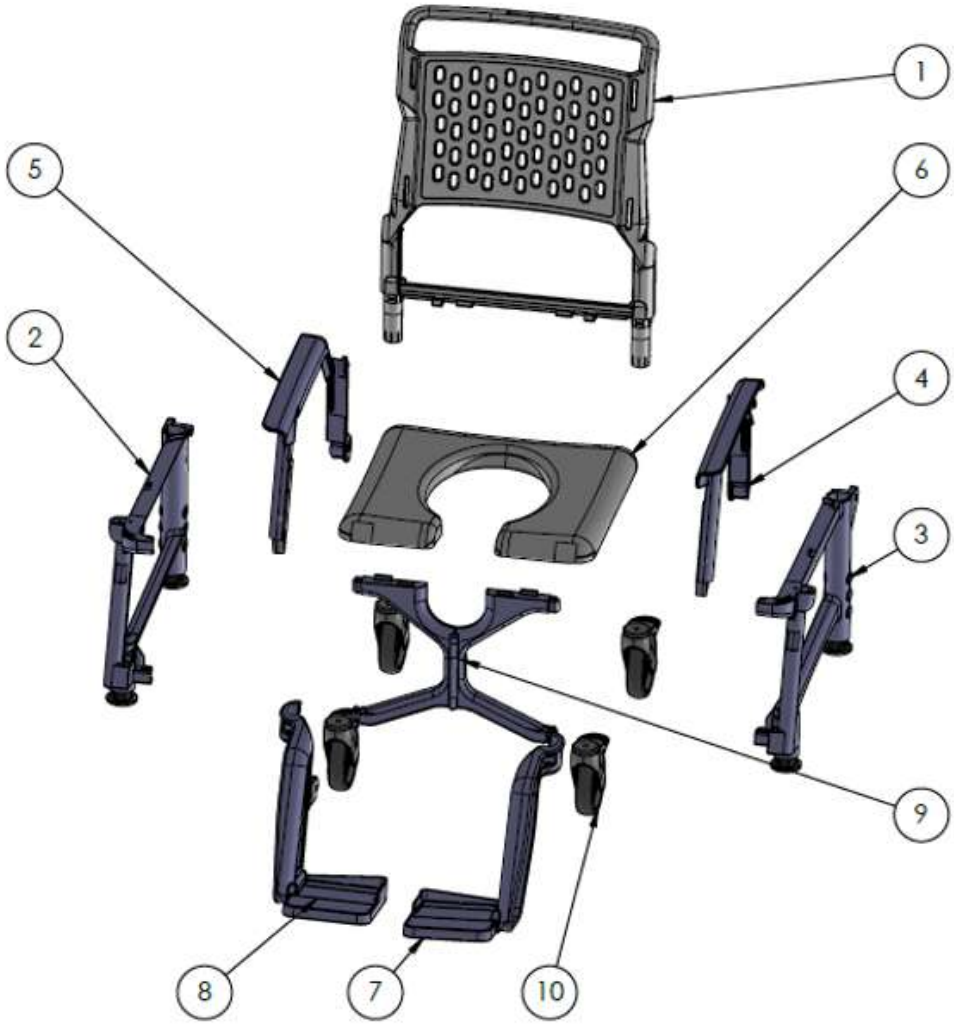

ASSEMBLY

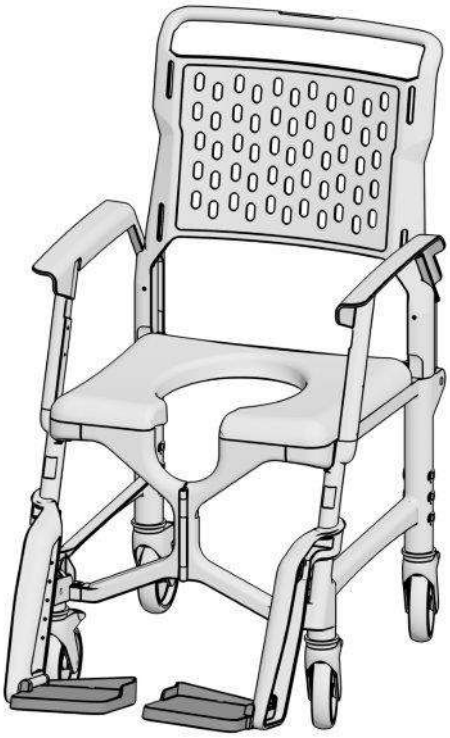

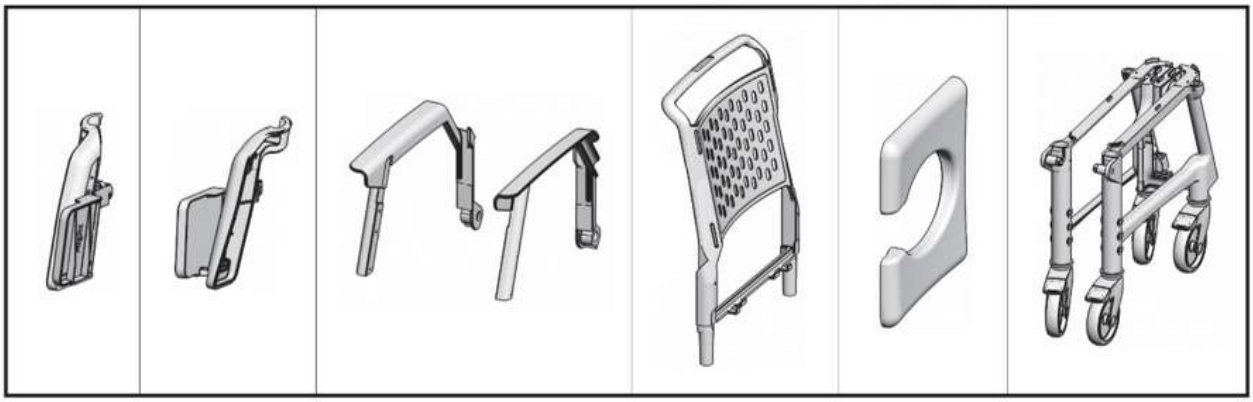

1

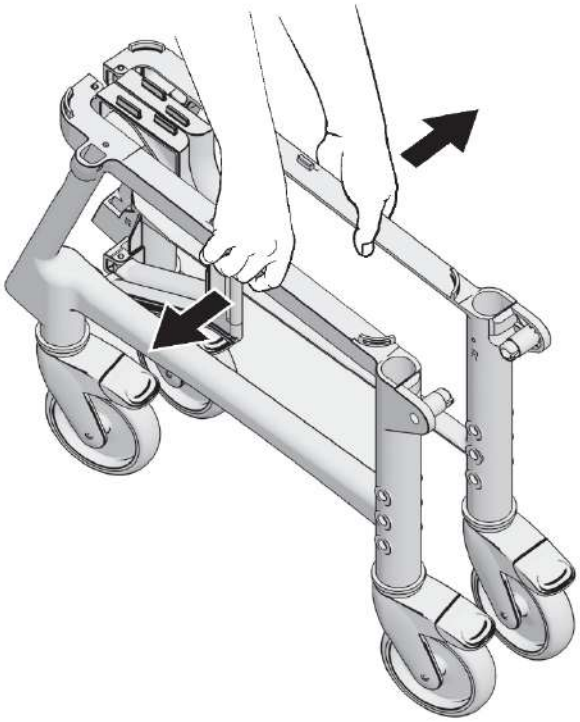

2

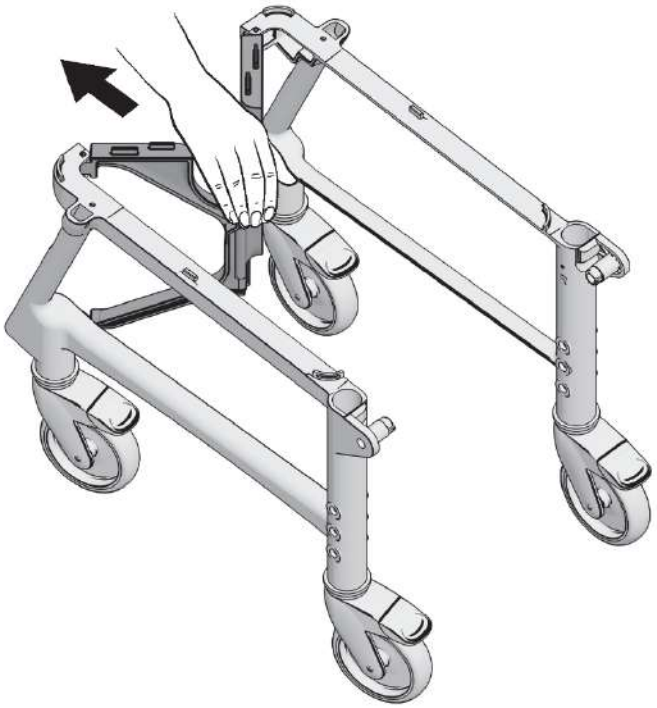

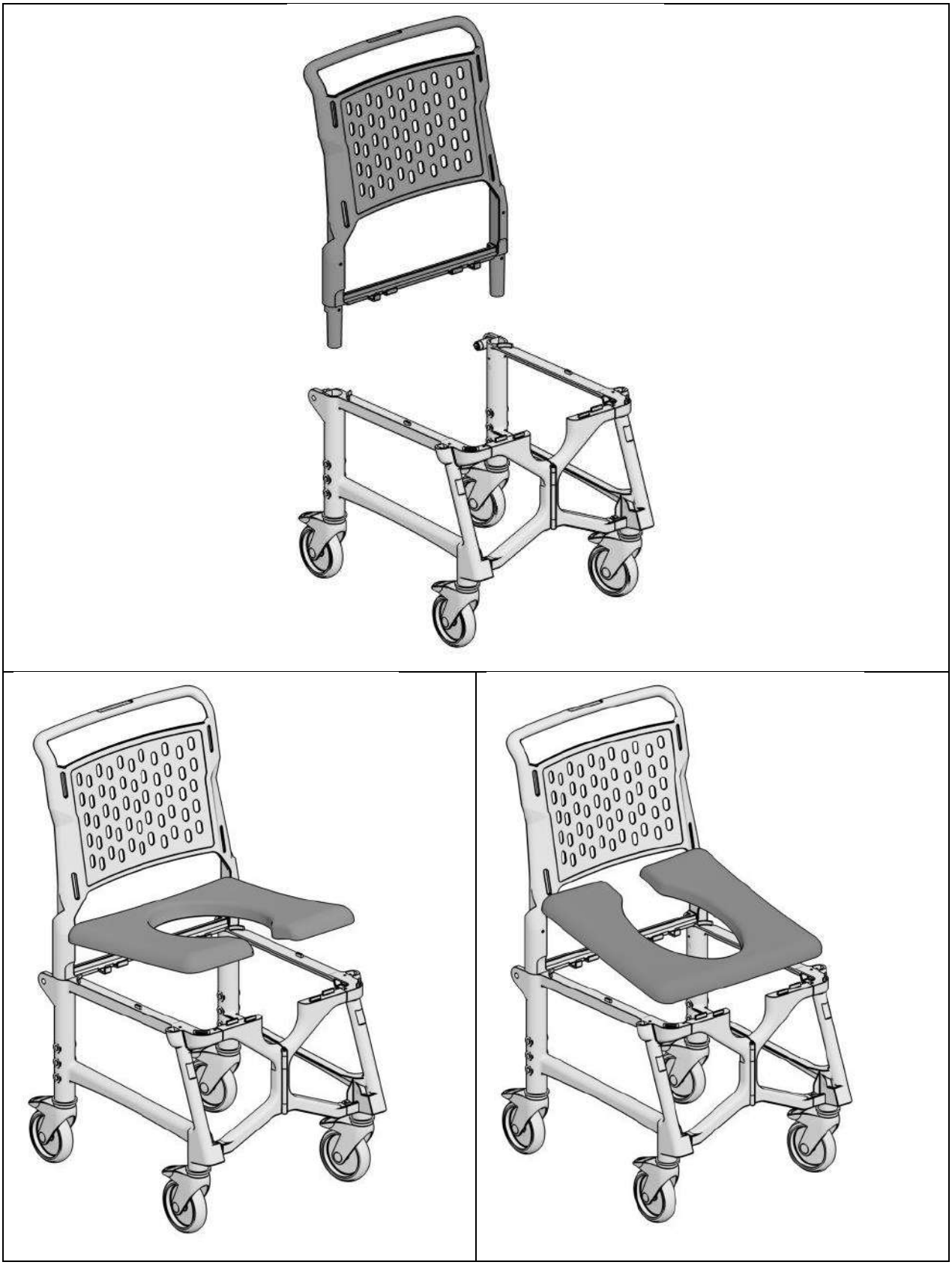

5

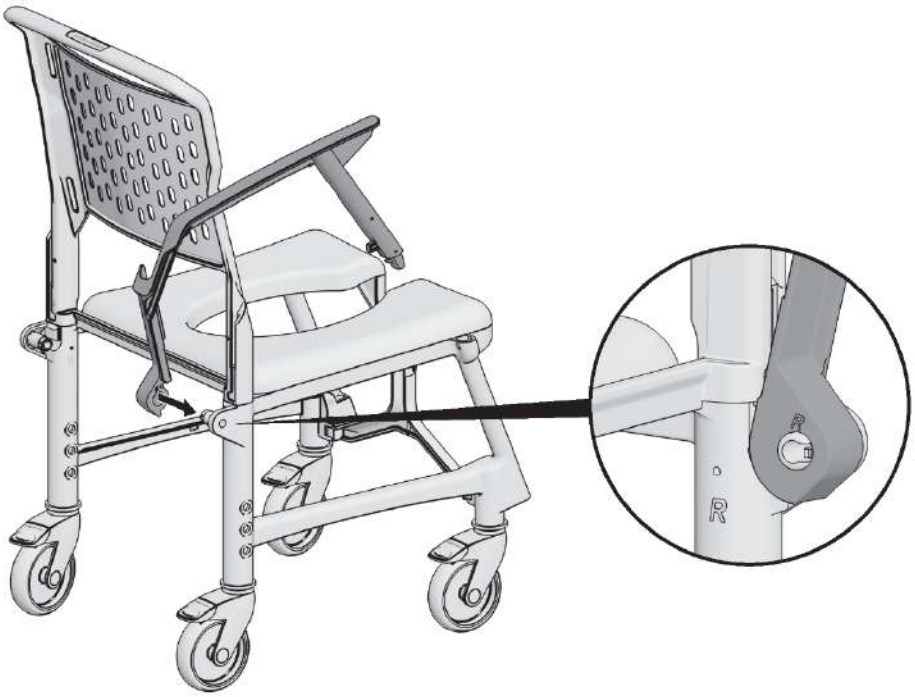

6

7

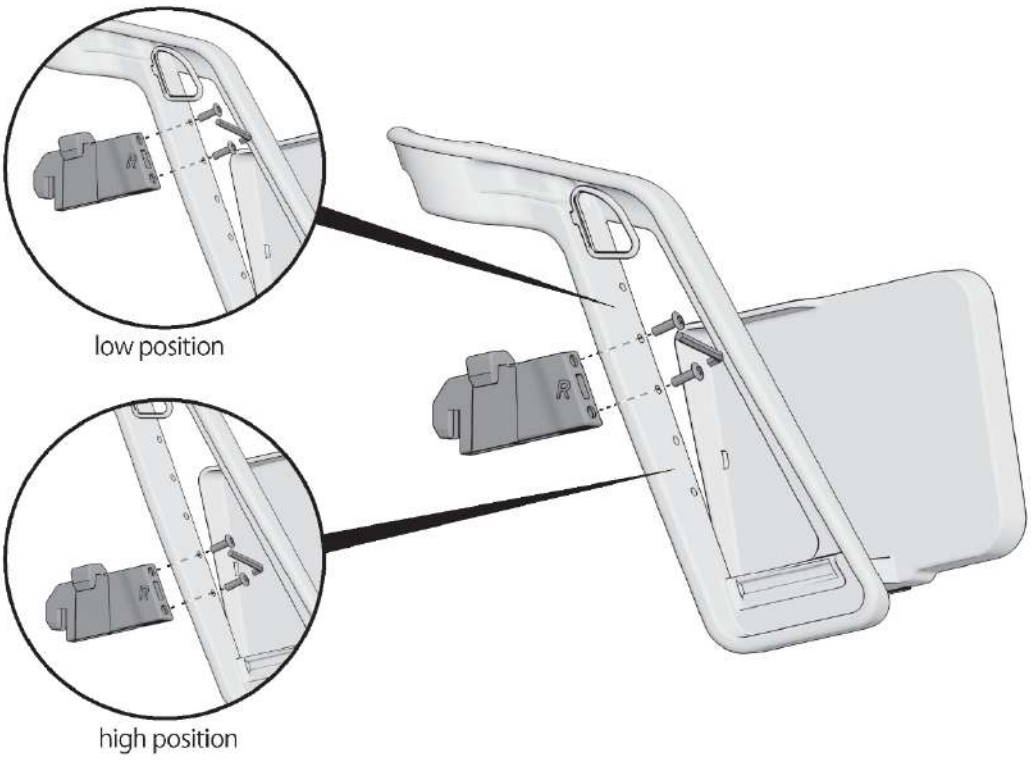

8

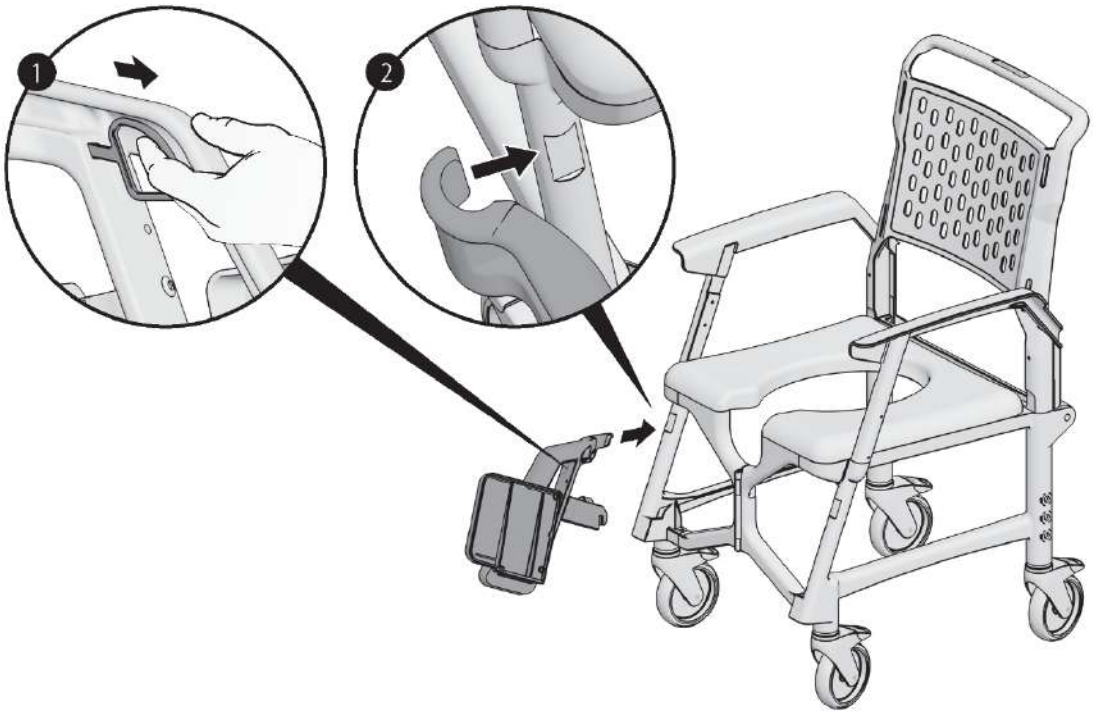

9

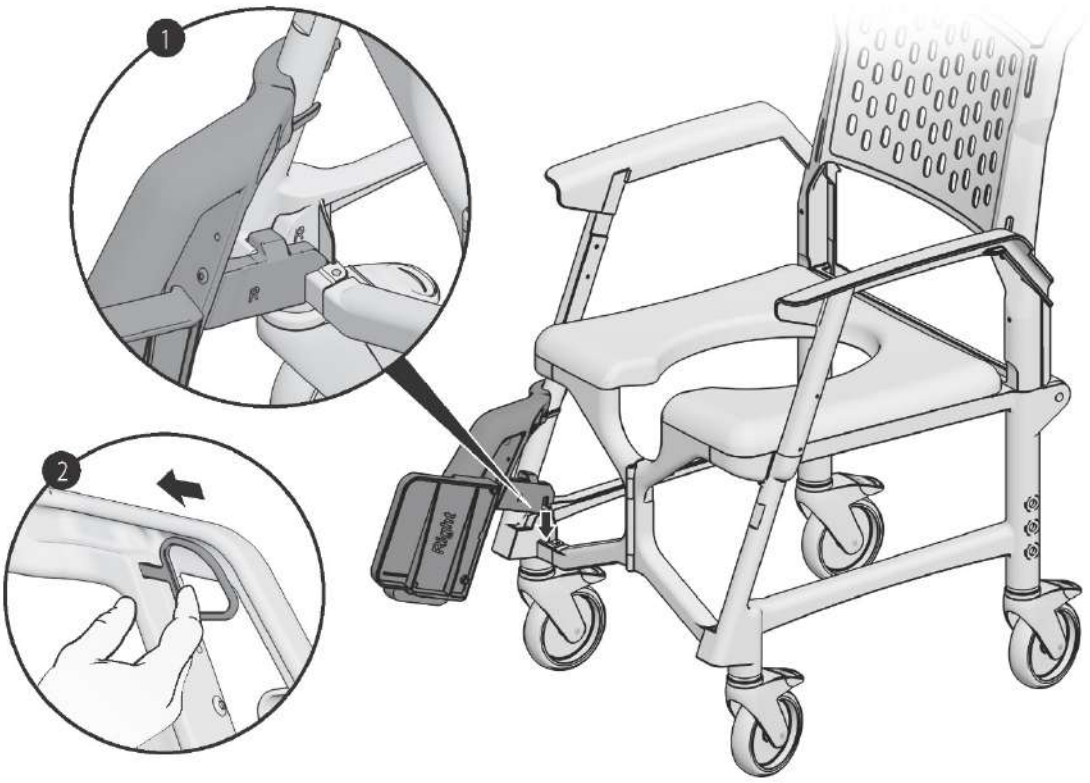

10

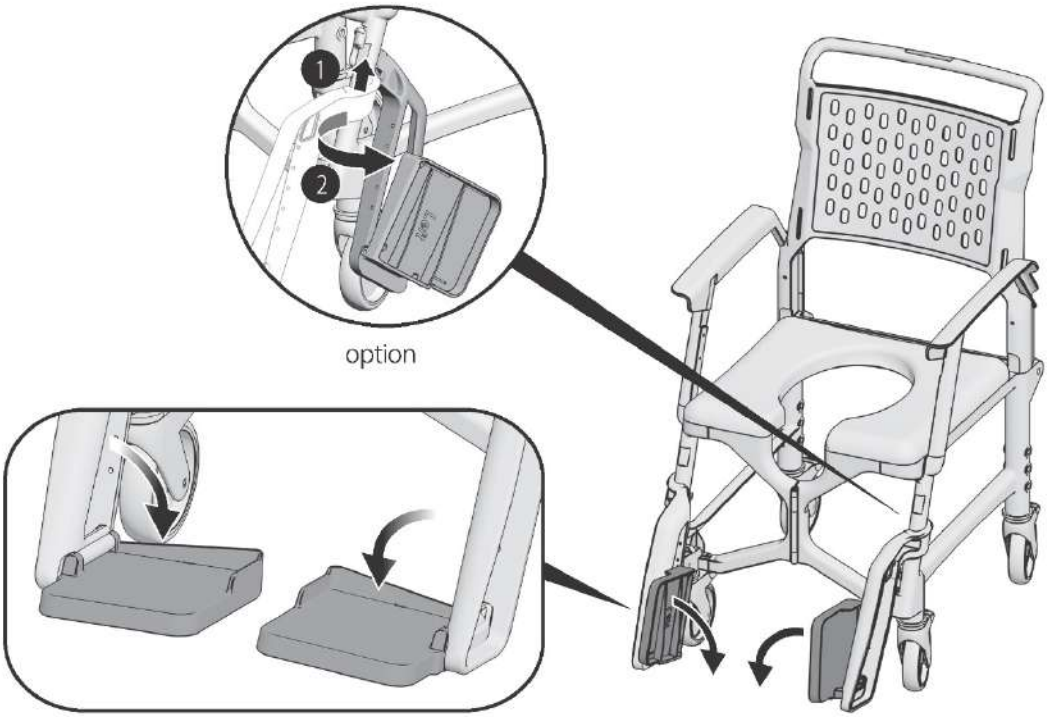

11

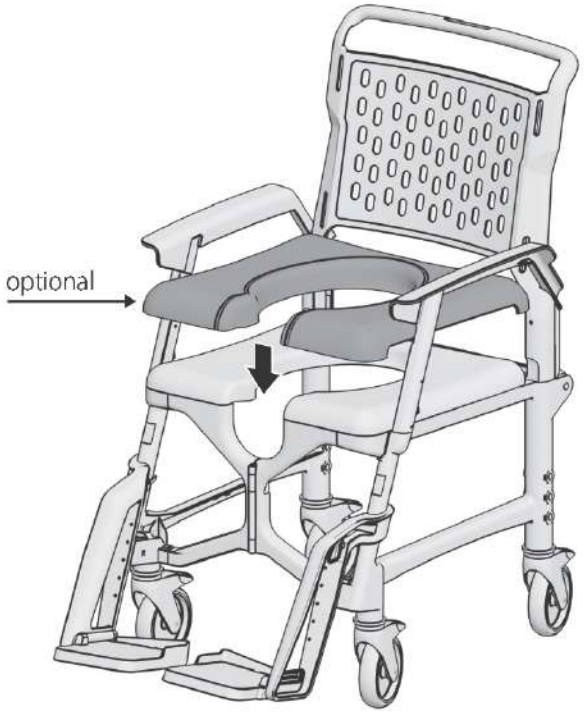

12

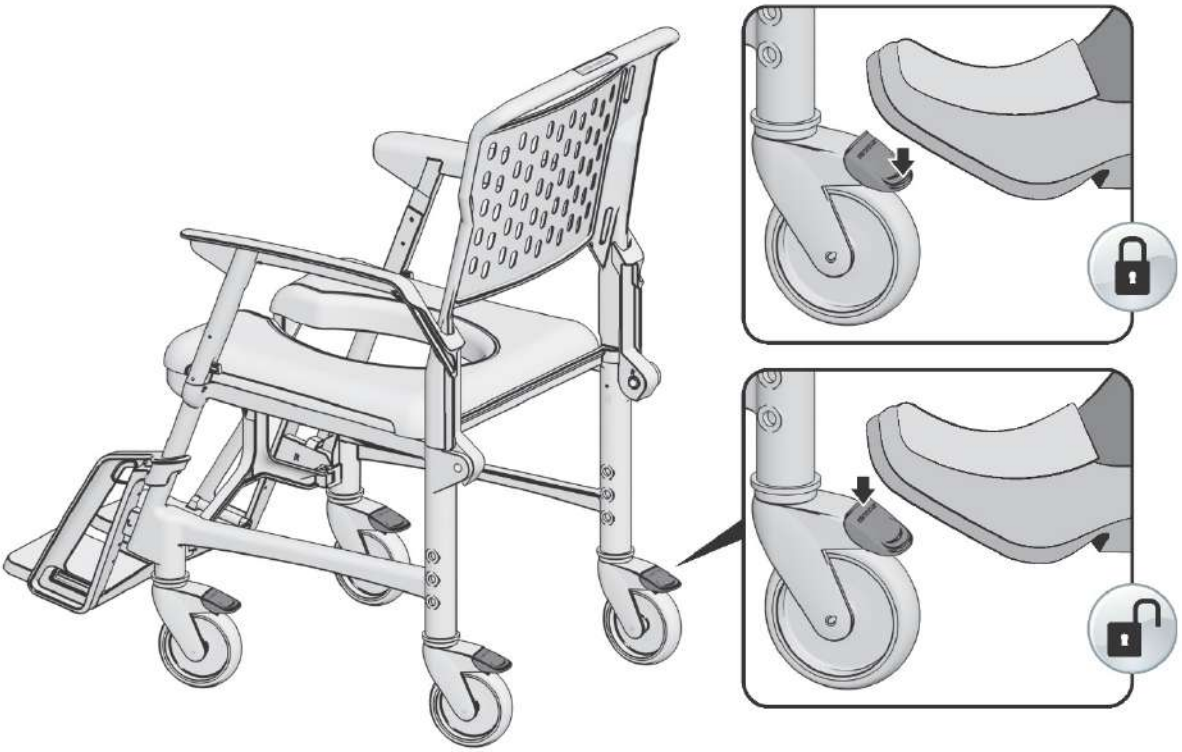

OPTIONAL SELF-PROPELLED MODEL

13

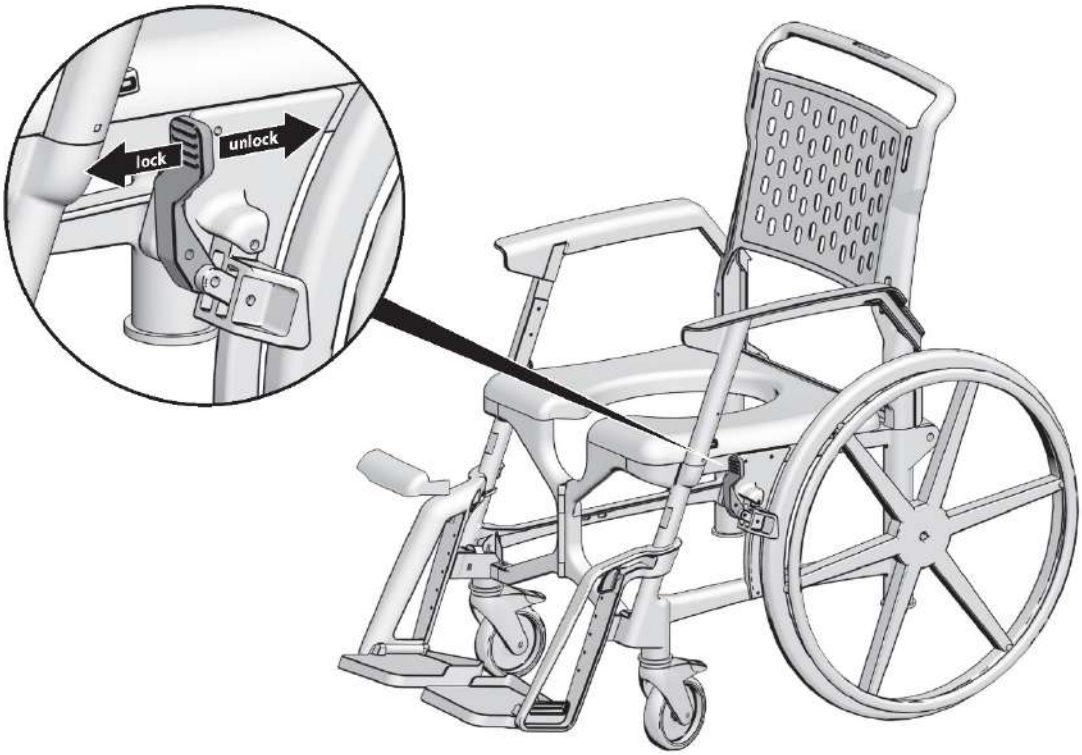

DISASSEMBLY

1

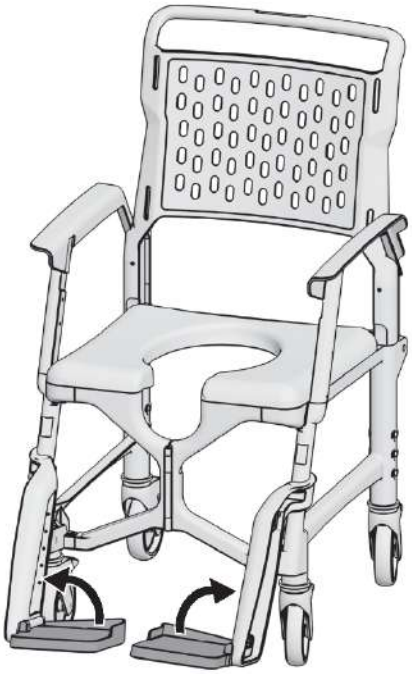

2

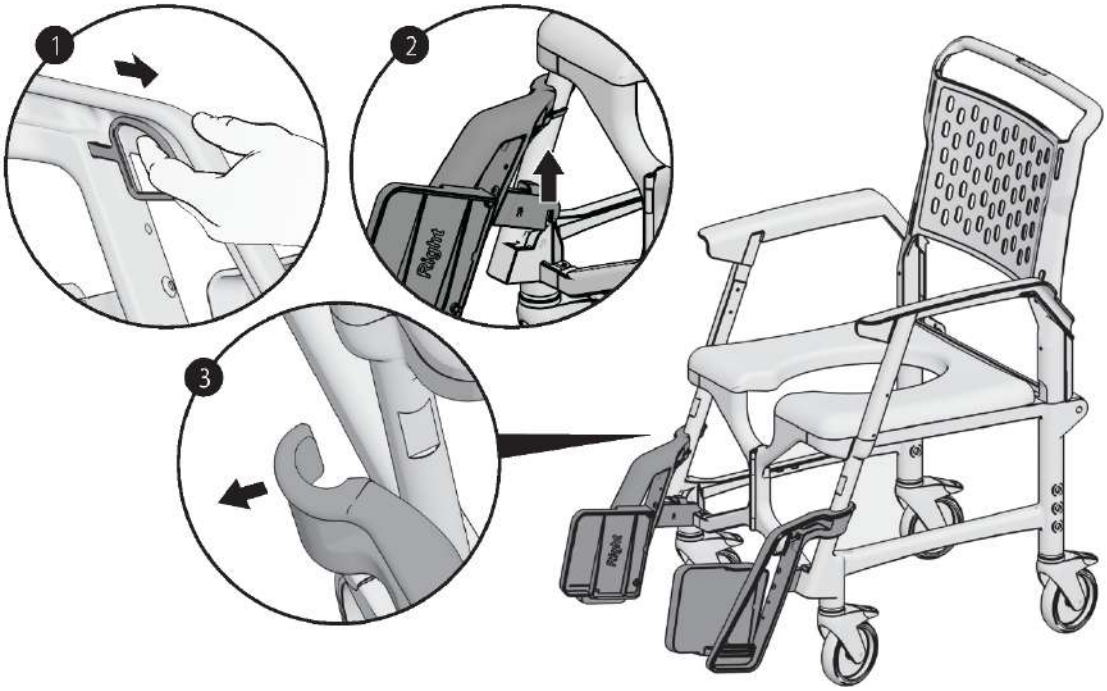

3

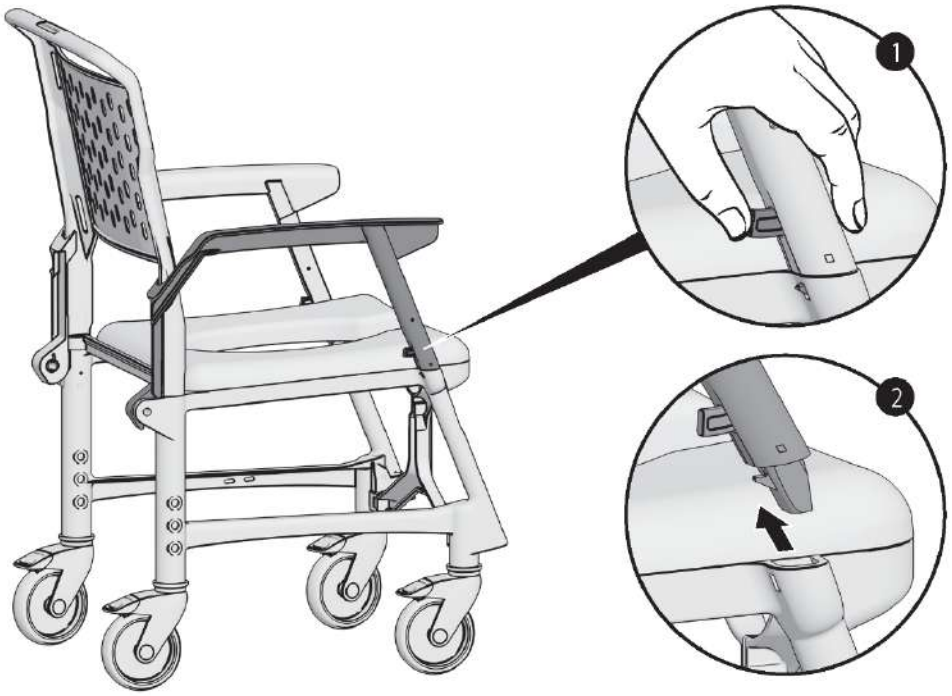

4

5

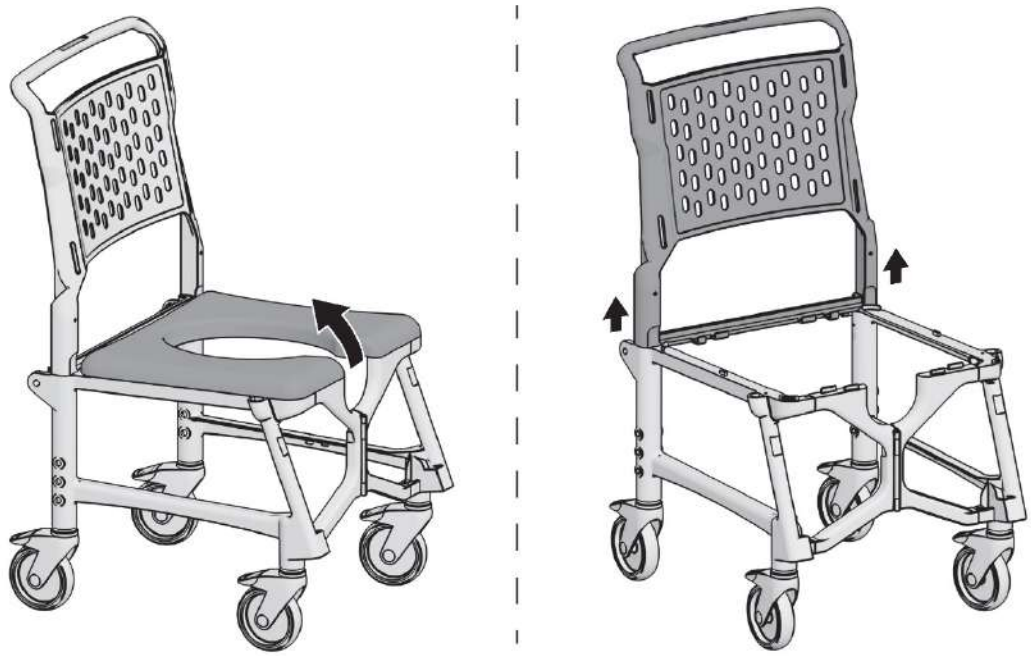

6

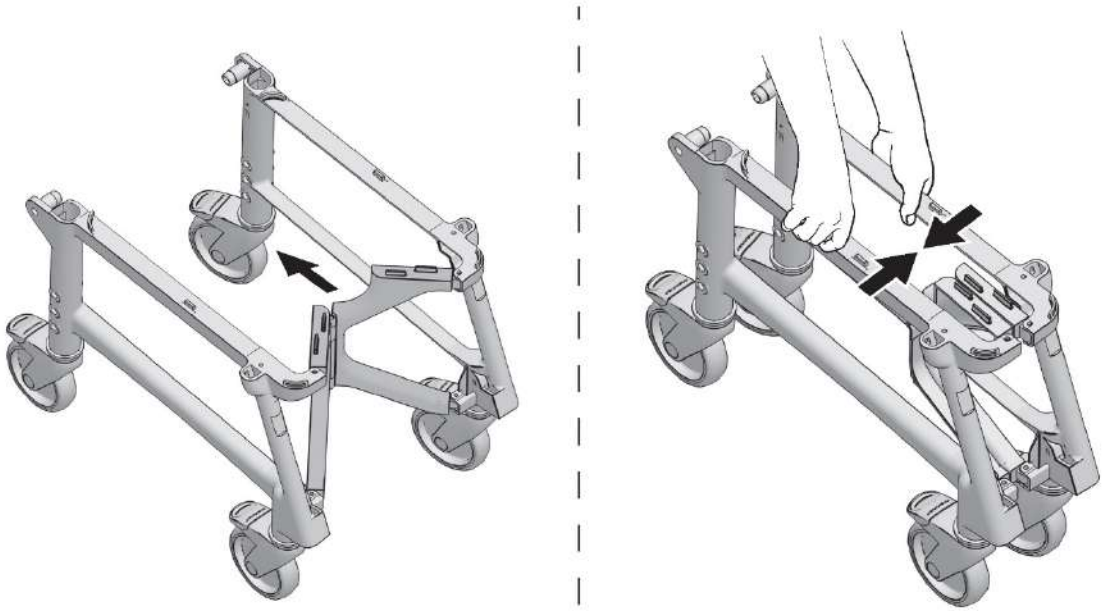

OPTIONAL ACCESSORIES

PADDED SEAT

1

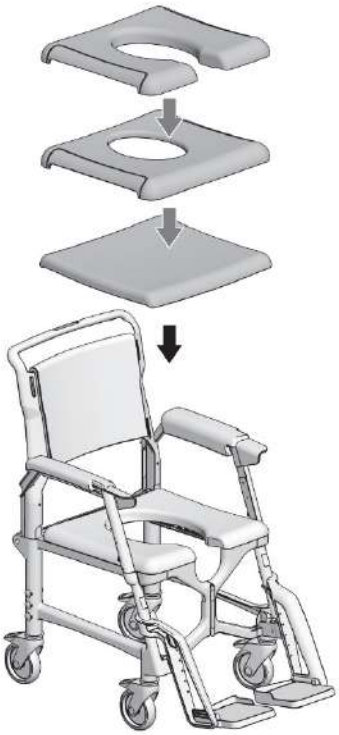

2

PADDED ARM RESTS

3

4

SHOWER HOLDER

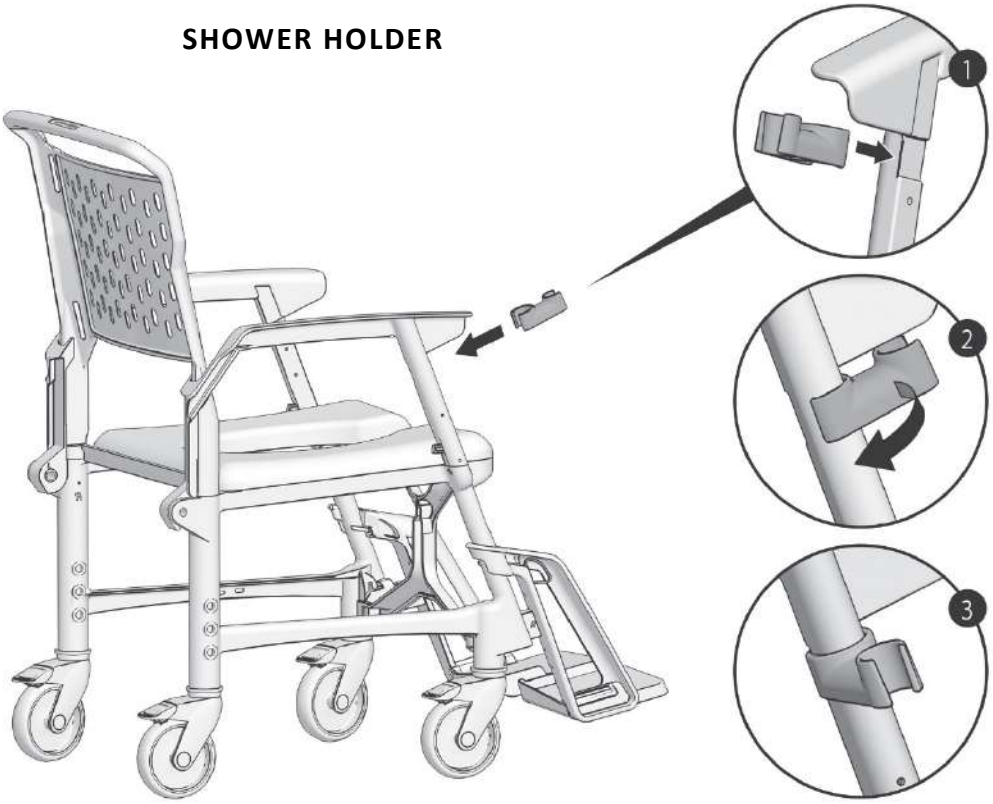

RECTANGULAR REMOVABLE PAN - OPTION 1

5

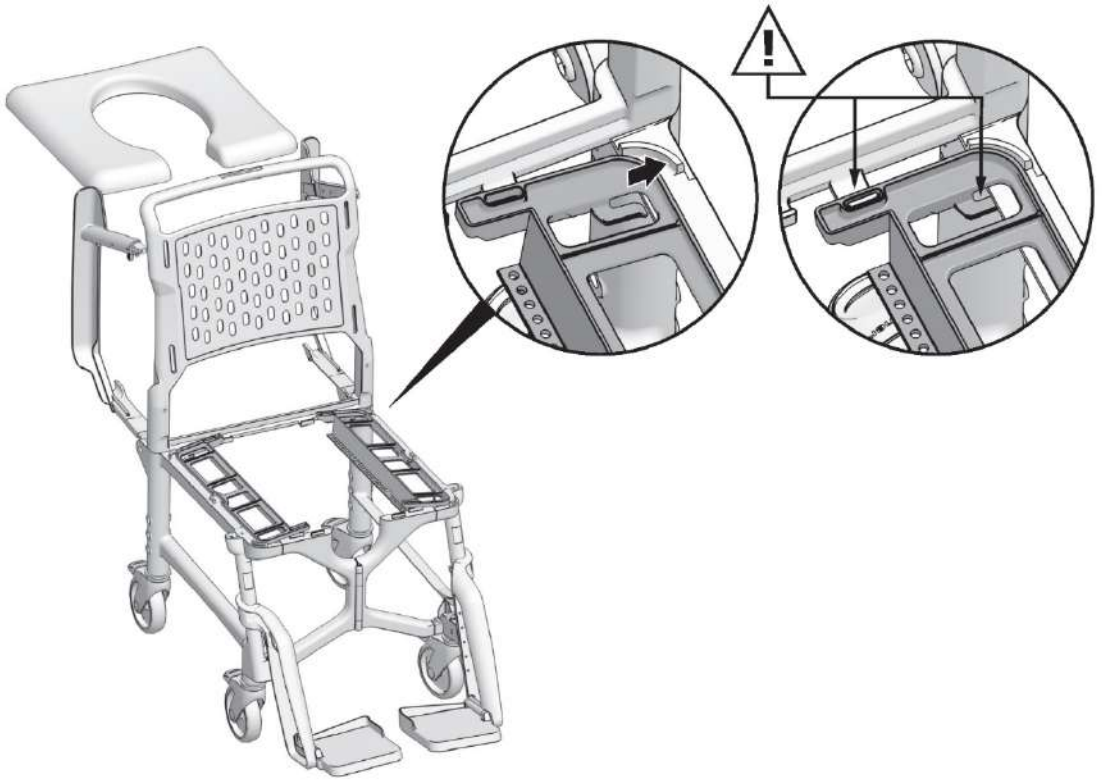

6

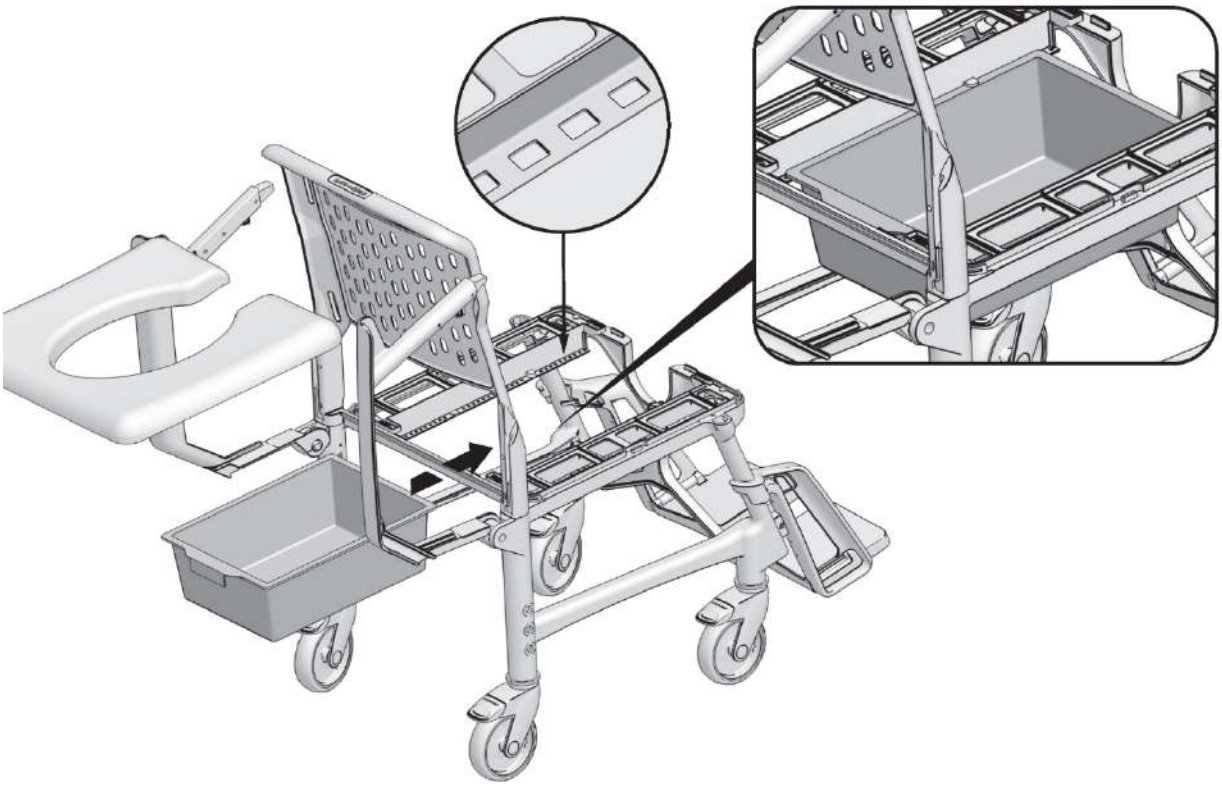

ROUND REMOVABLE PAN - OPTION 2

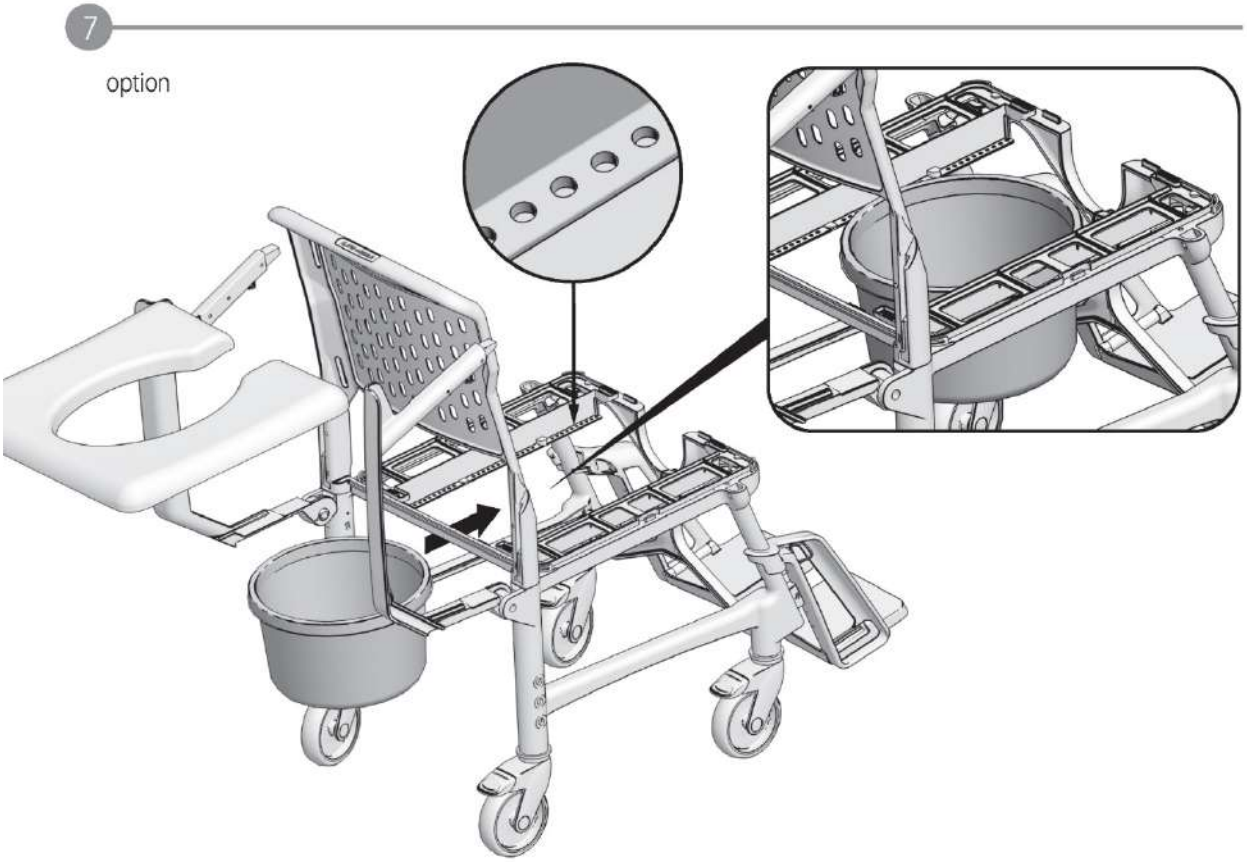

CARRYING CASE

1

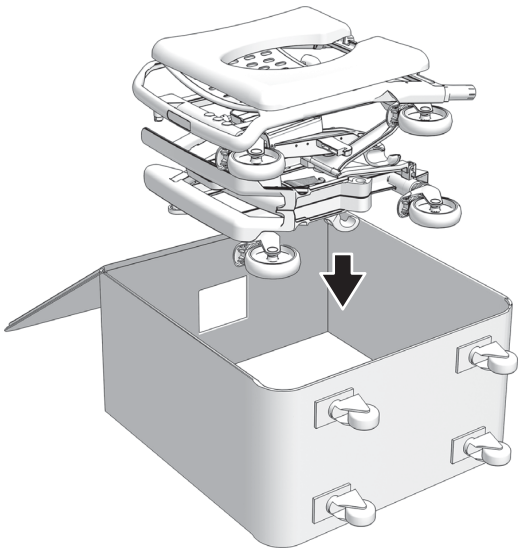

2

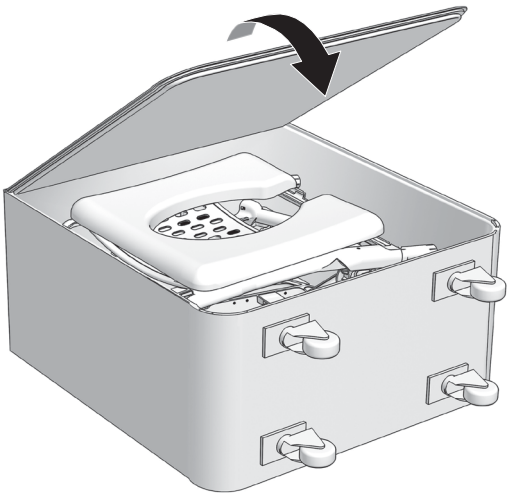

3

CLEANING AND MAINTENANCE

The commode and shower chair can be cleaned using a mild cleaning and disinfecting agent. Simply wipe the commode and shower chair with clean water and cloth, and then wipe dry with a clean cloth.

Do not use abrasive scouring agents or cleaners (read the product instructions!) that contain aggressive solvents (acids, thinners). Do not use stiff cleaning brushes, as these will damage the plastic surfaces or cause deposits to build up on the plastic parts and other materials.

Never make any unauthorized modifications or conversions to the BathMobile commode and shower chair. These will adversely affect the safety and function of the commode and shower chair, void the warranty and nullify the manufacturer's liability!

WARRANTY

Dear client,

We thank you for choosing our product.

This product warranty is valid for two years from the date of purchase.

If you experience problems with your SEATARA product or if it is damaged, please contact the store you purchased it from.

Warning! Please read the user manual and warnings in this document before using this product.

To activate the warranty, select one of the following options:

1. Complete the attached customer information form and send it to us, together with a copy of the purchase receipt.
2. Fill out the warranty form (also available on www.seatara.com)

First name	
Last Name	
Address	
City	
State	
Country	
Email	
Product serial number	
Place of purchase (Company/Retailer name)	
Purchase date	

This product includes a user manual that provides instructions on how to assemble and fold it. Please make sure you understand the instructions. If necessary, refer to the SEATARA website or contact one of SEATARA's retailers for further assistance.

Note that warning labels are affixed to the product to alert you to incorrect use.

We guarantee the integrity and functioning of all plastic and metal parts.

In the event of a warranty claim, the warranty is valid only when a filled customer information form (found at the end of this user manual) and a proof of purchase (i.e., a receipt) are provided.

This warranty does not apply to the product’s textile and sponge parts, rubber parts, upholstery, or surfaces (i.e., discoloration, scratches or wear and tear arising from use).

Also, the warranty does not apply to product damage resulting from unreasonable or improper use, falls from a height, or other accident.

WARNINGS FOR USE

- An "indoor product" is a product that is designed for use indoors and not outdoors. This product is an indoor product optimized for use on paved, level floors. It is designed for use only as a commode and shower chair in toilets and for bathing.
- Do not use the product to go up or down stairs.
- Do not tilt the product when a person is sitting on it.
- Do not use the product on slopes and inclines greater than 10%, or surfaces that tilt more than 5% to one side.
- The user’s weight must not exceed 130 kg.
- If there is sensitivity in the seating area, use a padded cushion.

If the product is dropped, hit, or damaged in any way that prevents the safe use of the product, stop using the product and have the product’s integrity verified by a company representative.

Manufacturer

Seatara Medical LTD.
6 Spinoza St, Ra'anana
4358810 Israel
www.seatara.com
Tel: +972-9-7741298

EC REP

MedNet EC-REP GmbH
Borkstrasse 10,
48163 Muenster, Germany

ISO 13485:2016 IQC Institute of Quality & Control Certified Medical Devices Management System

CE

MD
Medical Device